Heiztechnik®

warms us up!

5th class PN EN 303 5 2012

ECO design Rozp. UE 2015/1189

GreenLine eco-boilers 5 class

04.2019

PRICE LIST

Heiztechnik®

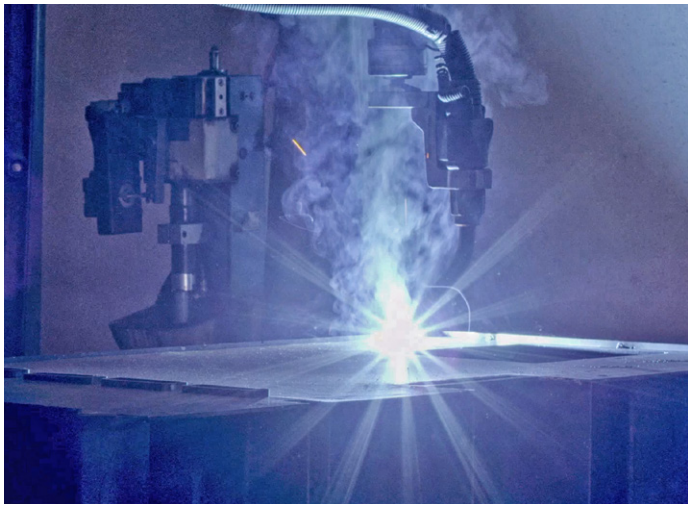

Production Company ***Heiztechnik*** is a modern factory that produces boilers for burning solid fuels from ***3,9 kW*** do ***7 MW*** and complete container boiler rooms and other heating appliances. Production takes place in modern, facilities using high tech machinery; plasma and laser cutting machines for steel, numerically controlled press brakes and robotic welding stations. Manufactured products are characterized by very high energy efficiency, and simple, easy operation.
The design office continuously modernizes and prepares for production new heating devices.

The success of the company is the creation of a series of **GreenLine** boilers. Boilers fulfill environmental protection and energy efficiency requirements for the highest, **fifth class** and **ECO DESIGN**. These features are acheived by the specyfic construction of the heat exchanger and extended combustion chamber of ***Heiztechnik*** boilers. Produced boilers up to 300 kW are suitable for installation in closed systems. Combustion process is steered by the very modern boiler regulators. This boiler regulators in addition to professional control of the combustion process are able to manage the whole heat distribution system. We offer you modern heating devices with capacities from 3,9 kW to 7 MW. Products of the ***Heiztechnik*** company are probably the widest offer of boilers in Poland and are appreciated on foreign markets.

ZŁOTY MEDAL 2018 ZŁOTY MEDAL 2016

Targi Instalacje: 2016, **2018**

CERTYFIKAT POLSKIE CIEPŁO
PLATFORMA PRODUCENTÓW URZĄDZEŃ GRZEWCZYCH NA PALIWA STAŁE
- ekologia
- oszczędność
- polski produkt
- bezpieczeństwo
- bez rusztu

KLASA 5

5th class PN EN 303 5 2012

ECO design Rozp. UE 2015/1189

Bundesamt für Wirtschaft und Ausfuhrkontrolle

TÜVRheinland® CERTIFIED

ISO 3834:2006 Management System

www.tuv.com ID 9105085778

Targi Expo-Kielce 2015

GAZELE BIZNESU 2018 Puls Biznesu
19. EDYCJA RANKINGU NAJBARDZIEJ DYNAMICZNYCH MAŁYCH I ŚREDNICH FIRM

2010, 2011, 2012, 2013, 2014, 2015, 2016, 2018

ZŁOTA SIÓDEMKA branży budowlanej 2016

2015, 2016, 2017, 2018

NEW!

ONE

FUEL pellet **8 - 20 kW**

Pellet boilers - 5th class

Name / Type	Nominal power [kW]	Power range [kW]	Net price [PLN]	Gross price [PLN]
ONE 8	8	2 - 8	14 000,00	17 220,00
ONE 11	11	4 - 11	14 400,00	17 712,00
ONE 15	15	5 - 15	14 900,00	18 327,00
ONE 20	20	6 - 20	15 620,00	19 212,60

5th class PN EN 303 5 2012 | ECO design Rozp. UE 2015/1189 | A+

HT ONE

Execution options and accessories - surcharge

Boiler equipment			
Self-cleaning burner		included in price	
Automatic exchanger cleaning system		included in price	
Hydraulic system: DHW pump, valve pumps with controlled mixing valve		included in price	
Safety group: diaphragm vessel with safety valve		included in price	
Return Protection System with pump		included in price	
Control		**Net price [PLN]**	**Gross price [PLN]**
HT-tronic® 900 Touch	$_{KOTŁA}$ $_{CO}$ $_{CWU}$ $_{ZAW}$	included in price	
Expanding modules for automation		**Net price [PLN]**	**Gross price [PLN]**
HT-tronic M-Z2	Valve module $_{ZAW}$ $_{ZAW}$	500,00	615,00
HT-tronic M-BC	Buffer and circulation module $_{bufora}$ $_{CYRKUL}$	500,00	615,00
HT-tronic Rooms	Wired remote control panel with room thermostat	450,00	553,50
HT-tronic Rooms Wireless	Wireless remote rontrolpanel with room thermostat	570,00	701,10
HT-tronic TPP	Wired room thermostat with a weekly program	160,00	196,80
HT-tronic TPBP	Wireless room thermostat with weekly program	325,00	399,75
HT-tronic Connect	Internet module	550,00	676,50
HT-tronic Lambda	Lambda probe	1400,00	1722,00

NEW!

ONE BASIC

FUEL pellet **8 - 20 kW**

Pellet boilers - 5th class

Name / Type	Nominal power [kW]	Power range [kW]	Net price [PLN]	Gross price [PLN]
ONE BASIC 8	8	2 - 8	11 200,00	13 776,00
ONE BASIC 11	11	4 - 11	11 600,00	14 268,00
ONE BASIC 15	15	5 - 15	12 100,00	14 883,00
ONE BASIC 20	20	6 - 20	12 500,00	15 375,00

5th class PN EN 303 5 2012 | ECO design Rozp. UE 2015/1189 | A+

Execution options and accessories - surcharge

Boiler equipment			
Self-cleaning burner		included in price	
System of mechanical, manual cleaning of the exchanger		included in price	
Return Protection System with pump		included in price	
Control		**Net price [PLN]**	**Gross price [PLN]**
HT-tronic® 900	$_{KOTŁA}$ $_{CO}$ $_{CWU}$ $_{ZAW}$	included in price	
Expanding modules for automation		**Net price [PLN]**	**Gross price [PLN]**
HT-tronic M-Z2	Valve module $_{ZAW}$ $_{ZAW}$	500,00	615,00
HT-tronic M-BC	Buffer and circulation module $_{bufora}$ $_{CYRKUL}$	500,00	615,00
HT-tronic Rooms	Wired remote control panel with room thermostat	450,00	553,50
HT-tronic Rooms Wireless	Wireless remote rontrolpanel with room thermostat	570,00	701,10
HT-tronic TPP	Wired room thermostat with a weekly program	160,00	196,80
HT-tronic TPBP	Wireless room thermostat with weekly program	325,00	399,75
HT-tronic Connect	Internet module	550,00	676,50
HT-tronic Lambda	Lambda probe	1400,00	1722,00

HT DasPell LuxGL

FUEL pellet

12 - 20 kW

Pellet boilers - 5th class					
Name / Type	Nominal power [kW]	Power range [kW]	Heated surface [m²]*	Net price [PLN]	Gross price [PLN]
HT DasPell LuxGL 12	12	4 - 12	40 - 120	13 280,00	16 334,40
HT DasPell LuxGL 15	15	5 - 15	50 - 150	13 800,00	16 974,00
HT DasPell LuxGL 20	20	6 - 20	60 - 200	14 470,00	17 798,10

5th class PN EN 303 5 2012 | ECO design Rozp. UE 2015/1189 | A+

*- depends on heating requriements for the building

Standard execution: burner and tank on the right side of the boiler
Optional execution: burner and tank on the left side of the boiler, enlarged tank

Execution options and accessories - surcharge

Burner			
Burner with automatic slag scraper		included in price	
Control		**Net price [PLN]**	**Gross price [PLN]**
HT-tronic® 900 Touch	KOTŁA CO CWU ZAW	included in price	
Expanding modules for automation		**Net price [PLN]**	**Gross price [PLN]**
HT-tronic M-Z2	Valve module ZAW ZAW	500,00	615,00
HT-tronic M-BC	Buffer and circulation module bufora CYRKUL	500,00	615,00
HT-tronic Rooms	Wired remote control panel with room thermostat	450,00	553,50
HT-tronic Rooms Wireless	Wireless remote control panel with room thermostat	570,00	701,10
HT-tronic TPP	Wired room thermostat with a weekly program	160,00	196,80
HT-tronic TPBP	Wireless room thermostat with weekly program	325,00	399,75
HT-tronic Connect	Internet module www	550,00	676,50
HT-tronic Lambda	Lambda probe	1400,00	1722,00
Additional equipment / Execution option		**Net price [PLN]**	**Gross price [PLN]**
Enlarged tank Lux 400		500,00	615,00
Additional fuel feed unit from the silo		individual pricing	
Cooling coil for 12 - 15 kW		750,00	922,50
for 20 kW		1 000,00	1 230,00

HT DasPell BOX GL

FUEL pellet

12 - 20 kW

Pellet boilers - 5th class					
Name / Type	Nominal power [kW]	Power range [kW]	Heated surface [m²]*	Net price [PLN]	Gross price [PLN]
HT DasPell BOX GL 12	12	4 - 12	40 - 120	11 680,00	14 366,40
HT DasPell BOX GL 15	15	5 - 15	50 - 150	12 230,00	15 042,90
HT DasPell BOX GL 20	20	6 - 20	60 - 200	12 850,00	15 805,50

*- depends on heating requriements for the building

5th class PN EN 303 5 2012 | ECO design Rozp. UE 2015/1189 | A+

Standard execution: burner and tank on the right side of the boiler
Optional execution: burner and tank on the left side of the boiler, enlarged tank

Execution options and accessories - surcharge

Burner		**Net price [PLN]**	**Gross price [PLN]**
Burner Standard		included in price	
Burner with automatic slag scraper		700,00	861,00
Control		**Net price [PLN]**	**Gross price [PLN]**
HT-tronic® 900	KOTŁA CO CWU ZAW	included in price	
HT-tronic® 900 Touch	KOTŁA CO CWU ZAW	400,00	492,00
Expanding modules for automation		**Net price [PLN]**	**Gross price [PLN]**
HT-tronic M-Z2	Valve module ZAW ZAW	500,00	615,00
HT-tronic M-BC	Buffer and circulation module bufora CYRKUL	500,00	615,00
HT-tronic Rooms	Wired remote control panel with room thermostat	450,00	553,50
HT-tronic Rooms Wireless	Wireless remote control panel with room thermostat	570,00	701,10
HT-tronic TPP	Wired room thermostat with a weekly program	160,00	196,80
HT-tronic TPBP	Wireless room thermostat with weekly program	325,00	399,75
HT-tronic Connect	Internet module www	550,00	676,50
HT-tronic Lambda	Lambda probe	1400,00	1722,00
Additional equipment / Execution option		**Net price [PLN]**	**Gross price [PLN]**
Redirect exhaust gases up through the flue		300,00	369,00
Universal tank BIG 400		500,00	615,00
Universal tank BIG 600		700,00	861,00
Additional fuel feed unit from the silo		individual pricing	
The automatic ash removal system		2 500,00	3 075,00
Cooling coil for 12 - 15 kW		750,00	922,50
for 20 kW		1 000,00	1 230,00

HT DasPell GL

FUEL pellet **12 - 60 kW**

Pellet boilers - 5th class

Name / Type	Nominal power [kW]	Power range [kW]	Heated surface [m²]*	Net price [PLN]	Gross price [PLN]
HT DasPell GL 12	12	4 - 12	40 - 120	11 680,00	14 366,40
HT DasPell GL 15	15	5 - 15	50 - 150	12 230,00	15 042,90
HT DasPell GL 20	20	6 - 20	60 - 200	12 850,00	15 805,50
HT DasPell GL 25	25	8 - 25	80 - 250	13 960,00	17 170,80
HT DasPell GL 30	30	9 - 30	90 - 300	15 070,00	18 536,10
HT DasPell GL 37	37	11 - 37	110 - 370	19 100,00	23 493,00
HT DasPell GL 50	50	15 - 50	150 - 500	20 000,00	24 600,00
HT DasPell GL 60	60	18 - 60	180 - 600	24 000,00	29 520,00

5th class PN EN 303 5 2012 | ECO design Rozp. UE 2015/1189 | A+

*- depends on heating requriements for the building

Standard execution: burner in the front of the boiler, tank on the right side of the boiler
Optional execution: enlarged tank, tank on the left side of the boiler

Execution options and accessories - surcharge

Burner		Net price [PLN]	Gross price [PLN]
Burner Standard		included in price	
Burner with automatic slag scraper		700,00	861,00
Control		**Net price [PLN]**	**Gross price [PLN]**
HT-tronic® 900	KOTŁA CO CWU ZAW	included in price	
HT-tronic® 900 Touch	KOTŁA CO CWU ZAW	400,00	492,00
Expanding modules for automation		**Net price [PLN]**	**Gross price [PLN]**
HT-tronic M-Z2	Valve module ZAW ZAW	500,00	615,00
HT-tronic M-BC	Buffer and circulation module bufora CYRKUL	500,00	615,00
HT-tronic Rooms	Wired remote control panel with room thermostat	450,00	553,50
HT-tronic Rooms Wireless	Wireless remote control panel with room thermostat	570,00	701,10
HT-tronic TPP	Wired room thermostat with a weekly program	160,00	196,80
HT-tronic TPBP	Wireless room thermostat with weekly program	325,00	399,75
HT-tronic Connect	Internet module	550,00	676,50
HT-tronic Lambda	Lambda probe	1400,00	1722,00
Additional equipment / Execution option		**Net price [PLN]**	**Gross price [PLN]**
Redirect exhaust gases up through the flue for boilers up to 40 kW		300,00	369,00
Slim tank		50,00	61,50
Universal tank BIG 400		500,00	615,00
Universal tank BIG 600		700,00	861,00
Tank BIG 1000		2000,00	2460,00
Additional fuel feed unit from the silo		individual pricing	
The automatic ash removal system - for power up to 25 kW		2 500,00	3 075,00
- for power above 30 kW		3 500,00	4 305,00
Cooling coil for 12 - 15 kW		750,00	922,50
for 20 - 37 kW		1 000,00	1 230,00
for 50 - 60 kW		1 500,00	1 845,00

Q Pellet GL

FUEL pellet **12 - 30 kW**

Pellet boilers - 5th class

Name / Type	Nominal power [kW]	Power range [kW]	Heated surface [m²]*	Net price [PLN]	Gross price [PLN]
Q Pellet GL 12	12	4 - 12	40 - 120	10 750,00	13 222,50
Q Pellet GL 15	15	5 - 15	50 - 150	11 130,00	13 689,90
Q Pellet GL 20	20	6 - 20	60 - 200	11 950,00	14 698,50
Q Pellet GL 25	25	8 - 25	80 - 250	12 980,00	15 965,40
Q Pellet GL 30	30	9 - 30	90 - 300	13 950,00	17 158,50

5th class PN EN 303 5 2012 | ECO design Rozp. UE 2015/1189 | A+

*- depends on heating requriements for the building

Execution: burner in the front of the boiler, tank on the right side of the boiler
Attention: universal door R/L, universal tank R/L

Execution options and accessories - surcharge

Burner		Net price [PLN]	Gross price [PLN]
Burner Standard		included in price	
Burner with automatic slag scraper		700,00	861,00
Control		**Net price [PLN]**	**Gross price [PLN]**
HT-tronic® 900	KOTŁA CO CWU ZAW	included in price	
Expanding modules for automation		**Net price [PLN]**	**Gross price [PLN]**
HT-tronic M-Z2	Valve module ZAW ZAW	500,00	615,00
HT-tronic M-BC	Buffer and circulation module bufora CYRKUL	500,00	615,00
HT-tronic Rooms	Wired remote control panel with room thermostat	450,00	553,50
HT-tronic Rooms Wireless	Wireless remote control panel with room thermostat	570,00	701,10
HT-tronic TPP	Wired room thermostat with a weekly program	160,00	196,80
HT-tronic TPBP	Wireless room thermostat with weekly program	325,00	399,75
HT-tronic Connect	Internet module	550,00	676,50
HT-tronic Lambda	Lambda probe	1400,00	1722,00
Additional equipment / Execution option		**Net price [PLN]**	**Gross price [PLN]**
Additional fuel feed unit from the silo		individual pricing	

HT EKO GL

FUEL eco-pea coal **15 - 40 kW**

Automatic boiler for eco pea coal - class 5

Name / Type	Nominal power [kW]	Power range [kW]	Heated surface [m²]*	Net price [PLN]	Gross price [PLN]
HT EKO GL 15	15	5 - 15	50 - 150	10 300,00	12 669,00
HT EKO GL 20	20	6 - 20	60 - 200	11 270,00	13 862,10
HT EKO GL 24	24	8 - 24	80 - 240	12 100,00	14 883,00
HT EKO GL 30	30	9 - 30	90 - 300	12 920,00	15 891,60
HT EKO GL 40	40	12 - 40	120 - 400	14 650,00	18 019,50

5th class PN EN 303 5 2012 | ECO design Rozp. UE 2015/1189 | B

*- depends on heating requriements for the building

Standard execution: burner on the right side of the boiler
Optional execution: burner on the left side of the boiler

Execution options and accessories - surcharge

Burner			
Retort burner DUO		included in price	
Control		**Net price [PLN]**	**Gross price [PLN]**
HT-Tronic® 700	KOTŁA CO CWU ZAW	included in price	
HT-Tronic® 700 Touch	KOTŁA CO CWU ZAW	400,00	492,00
Expanding modules for automation		**Net price [PLN]**	**Gross price [PLN]**
HT-tronic M-Z2	Valve module ZAW ZAW	500,00	615,00
HT-tronic M-BC	Buffer and circulation module bufora CYRKUL	500,00	615,00
HT-tronic Rooms	Wired remote control panel with room thermostat	450,00	553,50
HT-tronic Rooms Wireless	Wireless remote control panel with room thermostat	570,00	701,10
HT-tronic TPP	Wired room thermostat with a weekly program	160,00	196,80
HT-tronic TPBP	Wireless room thermostat with weekly program	325,00	399,75
HT-tronic Connect	Internet module www	550,00	676,50
HT-tronic OPS	Combustion optimizer process with Lambda probe	4 000,00	4 920,00
Additional equipment / Execution option		**Net price [PLN]**	**Gross price [PLN]**
Redirect exhaust gases up through the flue		300,00	369,00
Tray feeder sensor		200,00	246,00
The automatic ash removal system - for boilers up to 24 kW		2 500,00	3 075,00
- for boilers with power above 30 kW		3 500,00	4 305,00
Cooling coil for 15 kW		550,00	676,50
for 20 - 40 kW		1 000,00	1 230,00

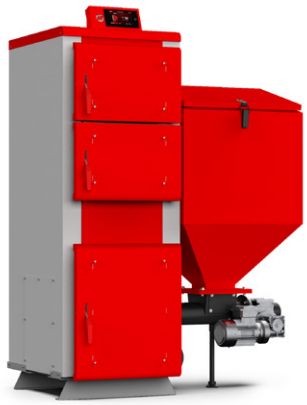

Q EKO GL

FUEL eco-pea coal **15 - 69 kW**

Automatic boiler for eco pea coal - class 5

Name / Type	Nominal power [kW]	Power range kW]	Heated surface [m²]*	Net price [PLN]	Gross price [PLN]
Q EKO GL 15	15	5 - 15	50 - 150	9 700,00	11 931,00
Q EKO GL 20	20	6 - 20	60 - 200	10 550,00	12 976,50
Q EKO GL 24	24	8 - 24	80 - 240	11 340,00	13 948,20
Q EKO GL 30	30	9 - 30	90 - 300	12 200,00	15 006,00
Q EKO GL 40	40	12 - 40	120 - 400	13 700,00	16 851,00
Q EKO GL 50	50	15 - 50	150 - 500	16 850,00	20 725,50
Q EKO GL 60	60	18 - 60	180 - 600	19 950,00	24 538,50
Q EKO GL 69	69	21 - 69	210 - 690	22 950,00	28 228,50

5th class PN EN 303 5 2012 | ECO design Rozp. UE 2015/1189 | B

*- depends on heating requriements for the building

Standard execution: burner on the right side of the boiler
Optional execution: burner on the left side of the boiler

Execution options and accessories - surcharge

Burner			
Retort burner DUO		included in price	
Control		**Net price [PLN]**	**Gross price [PLN]**
HT-Tronic® 700	KOTŁA CO CWU ZAW	included in price	
HT-Tronic® 700 Touch	KOTŁA CO CWU ZAW	400,00	492,00
Expanding modules for automation		**Net price [PLN]**	**Gross price [PLN]**
HT-tronic M-Z2	Valve module ZAW ZAW	500,00	615,00
HT-tronic M-BC	Buffer and circulation module bufora CYRKUL	500,00	615,00
HT-tronic Rooms	Wired remote control panel with room thermostat	450,00	553,50
HT-tronic Rooms Wireless	Wireless remote control panel with room thermostat	570,00	701,10
HT-tronic TPP	Wired room thermostat with a weekly program	160,00	196,80
HT-tronic TPBP	Wireless room thermostat with weekly program	325,00	399,75
HT-tronic Connect	Internet module www	550,00	676,50
HT-tronic OPS	Combustion optimizer process with Lambda probe	4 000,00	4 920,00
Additional equipment / Execution option		**Net price [PLN]**	**Gross price [PLN]**
Redirect exhaust gases up through the flue for boilers up to 40 kW		300,00	369,00
Enlarged tank for boilers with power 15 - 24 kW		400,00	492,00
Enlarged tank for boilers with power 30 - 50 kW		500,00	615,00
Tray feeder sensor		200,00	246,00
The automatic ash removal system - for boilers up to 24 kW		2 500,00	3 075,00
- for boilers with power above 30 kW		3 500,00	4 305,00
Cooling coil for 15 kW		750,00	922,50
for 20 - 40 kW		1 000,00	1 230,00
for 50 - 69 kW		1 500,00	1 845,00

MAXPELL GL 80

MAXPELL GL

FUEL pellet

80 - 450 kW

5klasa PN-EN 303-5:2012

ECO design Rozp. UE 2015/1189

Pellet boilers - 5th class				
Name / Type	Nominal power	Power range	Net price [PLN]	Gross price [PLN]
MAXPell GL 80	80	24 - 80	32 200,00	39 606,00
MAXPell GL 100	100	30 - 100	36 870,00	45 350,10
MAXPell GL 120	120	36 - 120	40 940,00	50 356,20
MAXPell GL 150	150	45 - 150	56 690,00	69 728,70
MAXPell GL 200	200	60 - 200	64 820,00	79 728,60
MAXPell GL 240	240	72 - 240	83 960,00	103 270,80
MAXPell GL 300	300	90 - 300	89 100,00	109 593,00
MAXPell GL 370	370	111 - 370	99 740,00	122 680,20
MAXPell GL 450	450	135 - 450	119 760,00	147 304,80

Execution options and accessories - surcharge

Burner		Net price [PLN]	Gross price [PLN]
Burner with automatic slag scraper		included in price	
Boilers with power: 300 - 450 kW - are equipped with two burners with automation		9 500,00	11 685,00
Control		**Net price [PLN]**	**Gross price [PLN]**
HT-tronic® 900	KOTŁA CO CWU ZAW	included in price	
HT-tronic® 900 Touch	KOTŁA CO CWU ZAW - boilers with one burner	400,00	492,00
HT-tronic® 900 Touch	KOTŁA CO CWU ZAW - boilers with two burners	800,00	984,00
Expanding modules for automation		**Net price [PLN]**	**Gross price [PLN]**
HT-tronic M-Z2	Valve module ZAW ZAW	500,00	615,00
HT-tronic M-BC	Buffer and circulation module bufora CYRKUL	500,00	615,00
HT-tronic Rooms	Wired remote control panel with room thermostat	450,00	553,50
HT-tronic Rooms Wireless	Wireless remote control panel with room thermostat	570,00	701,10
HT-tronic TPP	Wired room thermostat with a weekly program	160,00	196,80
HT-tronic TPBP	Wireless room thermostat with weekly program	325,00	399,75
HT-tronic Connect	Internet module www	550,00	676,50
HT-tronic Lambda	Lambda probe - in boilers equipped with one burner	1400,00	1722,00
HT-tronic Lambda	Lambda probe - in boilers equipped with two burners		
Cascade automation		individual pricing	
Additional equipment / Execution option		**Net price [PLN]**	**Gross price [PLN]**
Tank (1000 dm^3)		included in price	
Enlarged tank or atypical		individual pricing	
A common tank for handling two boilers		individual pricing	
Additional fuel feed unit		individual pricing	
The automatic ash removal system: - for power from 80 to 120 kW		11 000,00	13 530,00
- for power from 150 to 240 kW		14 000,00	17 220,00
- for power from 300 to 450 kW		23 000,00	28 290,00
Pneumatic system for exchanger cleaning - for power from 80 to 120 kW		12 000,00	14 760,00
- for power from 150 to 240 kW		18 000,00	22 140,00
- for power from 300 to 450 kW		23 000,00	28 290,00
Pneumatic system for burner cleaning		individual pricing	
Cooling coil for 80 - 300 kW		3 000,00	3 690,00

MAXPELL 550

MAXPELL

FUEL pellet

550 - 1000 kW

Boilers with a chute burner for burning pellet				
Name / Type	Nominal power	Power range	Net price [PLN]	Gross price [PLN]
MAXPell 550	550	165 - 550	151 490,00	186 332,70
MAXPell 630	630	189 - 630	181 010,00	222 642,30
MAXPell 750	750	225 - 750	245 340,00	301 768,20
MAXPell 850	850	255 - 850	270 380,00	332 567,40
MAXPell 1000	1000	300 - 1000	295 210,00	363 108,30

Execution options and accessories - surcharge

Burner			
Burner with automatic slag scraper		included in price	
Control		**Net price [PLN]**	**Gross price [PLN]**
HT-tronic® 900	KOTŁA CO CWU ZAW	included in price	
HT-tronic® 900 Touch	KOTŁA CO CWU ZAW - boilers with two burners	800,00	984,00
Expanding modules for automation		**Net price [PLN]**	**Gross price [PLN]**
HT-tronic M-Z2	Valve module ZAW ZAW	500,00	615,00
HT-tronic M-BC	Buffer and circulation module bufora CYRKUL	500,00	615,00
HT-tronic Rooms	Remote control panel with room thermostat	450,00	553,50
HT-tronic Rooms Wireless	Wireless remote control panel with room thermostat	570,00	701,10
HT-tronic TPP	Wired room thermostat with a weekly program	160,00	196,80
HT-tronic TPBP	Wireless room thermostat with weekly program	325,00	399,75
HT-tronic Connect	Internet module www	550,00	676,50
HT-tronic Lambda	Lambda probe - in boilers equipped with one burner	1400,00	1722,00
HT-tronic Lambda	Lambda probe - in boilers equipped with two burners	2800,00	3 444,00
Cascade automation		individual pricing	
Additional equipment / Execution option		**Net price [PLN]**	**Gross price [PLN]**
Tank (1000 dm^3)		included in price	
Enlarged tank or atypical		individual pricing	
A common tank for handling two boilers		individual pricing	
Additional fuel feed unit		individual pricing	
The automatic ash removal system	- for power to 630 kW	28 000,00	34 440,00
	- for power 750 kW	31 000,00	38 130,00
	- for power 850 kW	35 000,00	43 050,00
	- for power 1000 kW	40 000,00	49 200,00
Pneumatic system for exchanger cleaning - for power to 630 kW		25 000,00	30 750,00
- for power 750 kW		30 000,00	36 900,00
- for power 850 kW		33 000,00	40 590,00
- for power 1000 kW		35 000,00	43 050,00
Pneumatic system for burner cleaning		individual pricing	

Q MAX EKO GL120 kW

5th class PN EN 303 5 2012 ECO design Rozp. UE 2015/1189

Q MAX EKO GL FUEL eco-pea coal 80 - 480 kW

Automatic boiler for eco pea coal - class 5				
Name / Type	Nominal power	Power range	Net price [PLN]	Gross price [PLN]
Q MAX EKO 80 GL	80	24 - 80	27 000,00	33 210,00
Q MAX EKO 100 GL	100	33 - 100	32 950,00	40 528,50
Q MAX EKO 120 GL	120	36 - 120	36 170,00	44 489,10
Q MAX EKO 150 GL	150	45 - 150	45 890,00	56 444,70
Q MAX EKO 200 GL	200	60 - 200	62 450,00	76 813,50
Q MAX EKO 240 GL	240	72 -240	74 920,00	92 151,60
Q MAX EKO 300 GL	300	90 - 300	83 150,00	102 274,50
Q MAX EKO 350 GL	350	105 - 350	89 940,00	110 626,20
Q MAX EKO 400 GL	400	120 - 400	108 870,00	133 910,10
Q MAX EKO 480 GL	480	144 - 480	119 240,00	146 665,20

Execution options and accessories - surcharge

Burner			
Retort burner DUO	- basic equipment for boilers up to 240 kW	included in price	
Control			
HT-Tronic® 750	KOTŁA CO CWU ZAW	included in price	
Expanding modules for automation		**Net price [PLN]**	**Gross price [PLN]**
HT-tronic M-Z2	Valve module ZAW ZAW	500,00	615,00
HT-tronic M-BC	Buffer and circulation module bufora CYRKUL	500,00	615,00
HT-tronic Rooms	Wired remote control panel with room thermostat	450,00	553,50
HT-tronic Rooms Wireless	Wireless remote control panel with room thermostat	570,00	701,10
HT-tronic TPP	Wired room thermostat with a weekly program	160,00	196,80
HT-tronic TPBP	Wireless room thermostat with weekly program	325,00	399,75
HT-tronic Connect	Internet module www	550,00	676,50
HT-tronic OPS	Combustion optimizer process with Lambda probe	4 000,00	4 920,00
Additional equipment / Execution option		**Net price [PLN]**	**Gross price [PLN]**
Tray feeder sensor (1 item)		200,00	246,00
Enlarged tank		individual pricing	
Automatic system for fuel loading		individual pricing	
The automatic ash removal system:	- for power from 80 to 150 kW	11 000,00	13 530,00
	- for power from 200 to 300 kW	18 000,00	22 140,00
	- for power from 350 to 480 kW	20 000,00	24 600,00
Pneumatic system for exchanger cleaning	- for power from 80 to 150 kW	12 000,00	14 760,00
	- for power from 200 to 300 kW	18 000,00	22 140,00
	-for power from 350 to 480 kW	23 000,00	28 290,00
Cooling coil for 80 - 300 kW		3 000,00	3 690,00

Q MAX EKO 520 kW

Q MAX EKO FUEL eco-pea coal 520 - 1000 kW

Automatic boilers for burning eco-pea coal				
Name / Type	Nominal power	Power range	Net price [PLN]	Gross price [PLN]
Q MAX EKO 520	520	150 - 520	90 800,00	111 684,00
Q MAX EKO 600	600	180 - 600	104 330,00	128 325,90
Q MAX EKO 750	750	225 - 750	181 240,00	222 925,20
Q MAX EKO 850	850	355 - 850	199 820,00	245 778,60
Q MAX EKO 1000	1000	300 - 1000	221 730,00	272 727,90

Opcje wykonania i wyposażenia dodatkowego - dopłaty

Burner		**Net price [PLN]**	**Gross price [PLN]**
Standard Burner		included in price	
Control		**Net price [PLN]**	**Gross price [PLN]**
HT-Tronic® 750	KOTŁA CO CWU ZAW	included in price	
Expanding modules for automation		**Net price [PLN]**	**Gross price [PLN]**
HT-tronic M-Z2	Valve module ZAW ZAW	500,00	615,00
HT-tronic M-BC	Buffer and circulation module bufora CYRKUL	500,00	615,00
HT-tronic Rooms	Wired remote control panel with room thermostat	450,00	553,50
HT-tronic Rooms Wireless	Wireless remote control panel with room thermostat	570,00	701,10
HT-tronic TPP	Wired room thermostat with a weekly program	160,00	196,80
HT-tronic TPBP	Wireless room thermostat with weekly program	325,00	399,75
HT-tronic Connect	Internet module www	550,00	676,50
HT-tronic OPS	Combustion optimizer process with Lambda probe	4 000,00	4 920,00
Additional equipment / Execution option		**Net price [PLN]**	**Gross price [PLN]**
Tray feeder sensor (1 item)		200,00	246,00
Enlarged tank		individual pricing	
Automatic system for fuel loading		individual pricing	
Automatic ash removal system:	- for power to 600 kW	24 000,00	29 520,00
	- for power 750 kW	27 000,00	33 210,00
	- for power 850 kW	30 000,00	36 900,00
	- for power 1000 kW	33 000,00	40 590,00
Pneumatic system for exchanger cleaning	- for power to 600 kW	25 000,00	30 750,00
	- for power 750 kW	30 000,00	36 900,00
	- for power 850 kW	33 000,00	40 590,00
	- for power 1000 kW	35 000,00	43 050,00

Q PLUS AGRO 110 kW

Q PLUS AGRO

FUEL
Straw in cube bales

110 kW

Boilers designed for burning straw in cube bales with automatic control and a fan

Name / Type	Nominal power	Power range	Net price [PLN]	Gross price [PLN]
Q PLUS AGRO 110	110	30 - 100	20 190,00	24 833,70

Execution options and accessories - surcharge

Control			
HT-Tronic® 251	KOTŁA, CO, CWU, bufora, ZAW	included in price	
Expanding modules for automation		**Net price [PLN]**	**Gross price [PLN]**
HT-tronic M-Z2	Valve module ZAW, ZAW	500,00	615,00
HT-tronic TPP	Wired room thermostat with a weekly program	160,00	196,80
HT-tronic TPBP	Wireless room thermostat with weekly program	325,00	399,75
HT-tronic Connect	Internet module	550,00	676,50
Additional equipment / Execution option		**Net price [PLN]**	**Gross price [PLN]**
Cooling coil		3 000,00	3 690,00

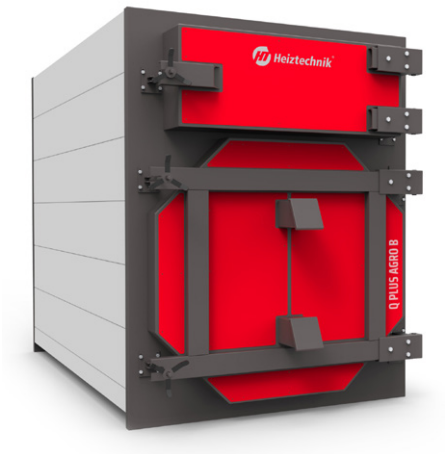

Q PLUS AGRO B 150 kW

Q PLUS AGRO

FUEL
Straw in round bales

150 - 500 kW

Boilers designed for burning straw in round bales with automatic control and a fan

Name / Type	Nominal power	Power range	Net price [PLN]	Gross price [PLN]
Q PLUS AGRO B 150	150	45 - 150	30 720,00	37 785,60
Q PLUS AGRO B 300	300	90 - 300	45 800,00	56 334,00
Q PLUS AGRO B 400	- Information available on request			
Q PLUS AGRO B 500	- Information available on request			

Execution options and accessories - surcharge

Control			
HT-Tronic® 251	KOTŁA, CO, CWU, bufora, ZAW	included in price	
Expanding modules for automation		**Net price [PLN]**	**Gross price [PLN]**
HT-tronic M-Z2	Valve module ZAW, ZAW	500,00	615,00
HT-tronic TPP	Wired room thermostat with a weekly program	160,00	196,80
HT-tronic TPBP	Wireless room thermostat with weekly program	325,00	399,75
HT-tronic Connect	Internet module	550,00	676,50
Additional equipment / Execution option		**Net price [PLN]**	**Gross price [PLN]**
Cooling coil for 150 -300 kW		3 000,00	3 690,00

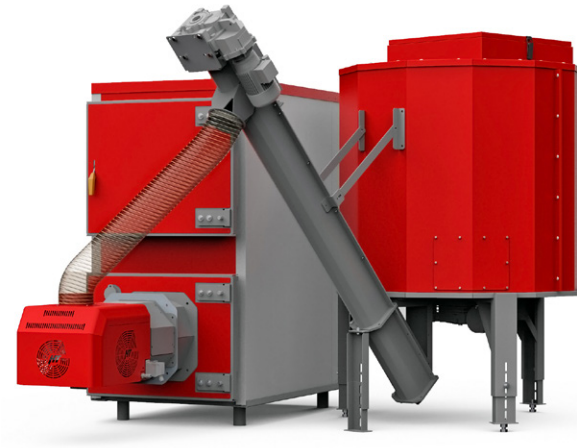

MaxPell ZB GL FUEL woodchips 80 - 240 kW

Automatic woodchips combustion kit with AZB burne			
Name / Type	Power range [kW]	Net price [PLN]	Gross price [PLN]
MAXPell ZB 60	60	46 400,00	57 072,00
MAXPell ZB 90	90	58 400,00	71 832,00
MAXPell ZB 120	120	63 400,00	77 982,00

5klasa PN-EN 303-5:2012

ECO design Rozp. UE 2015/1189

Execution options and accessories - surcharge

Burner			
AZB Burner with slag scraper		included in price	
Control		**Net price [PLN]**	**Gross price [PLN]**
HT-tronic® 900	KOTŁA CO CWU ZAW	included in price	
HT-tronic Lambda	Lambda probe	included in price	
Expanding modules for automation		**Net price [PLN]**	**Gross price [PLN]**
HT-tronic M-Z2	Valve module ZAW ZAW	500,00	615,00
HT-tronic M-BC	Buffer and circulation module bufora CYRKUL	500,00	615,00
HT-tronic TPP	Wired room thermostat with a weekly program	160,00	196,80
HT-tronic TPBP	Wireless room thermostat with weekly program	325,00	399,75
HT-tronic Connect	Internet module WWW	550,00	676,50
Additional equipment / Execution option		**Net price [PLN]**	**Gross price [PLN]**
Tank 1000 dm3		included in price	
Tank 2000 dm3		7 000,00	8 610 , 00
Extension (top section - level reiser) for a 1000 dm3 container with a capacity of 500 dm3		1 000,00	1 230,00
Extension (top section - level reiser) for a 2000 dm3 container with a capacity of 1000 dm3		1 500,00	1 845,00
Automatic ash removal system: - for power to 60 kW		3 500,00	4 305,00
- for power 90 - 120 kW		11 000,00	13 530,00
Pneumatic system for exchanger cleaning for power 90 - 120 kW		12 000,00	14 760,00
Pneumatic system for burner cleaning		individual pricing	
Cooling coil		3 000,00	3 690,00

Pellet burners

5th class PN EN 303 5 2012

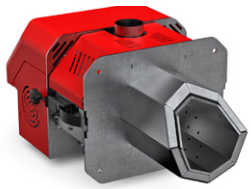

HT PellHard 14 - 70 kW

Pellet combustion burner with automation and 2mb feeder			
Name / Type	Power range [kW]	Net price [PLN]	Gross price [PLN]
HT PellHard 14	4- 14	5 540,00	6 814,20
HT PellHard 20	6 - 20	5 650,00	6 949,50
HT PellHard 28	7 - 28	5 750,00	7 072,50
HT PellHard 35	11 - 35	6 500,00	7 995,00
HT PellHard 45	14 - 45	7 960,00	9 790,80
HT PellHard 55	17 - 55	9 650,00	11 869,50
HT PellHard 70	21 - 70	11 400,00	14 022,00

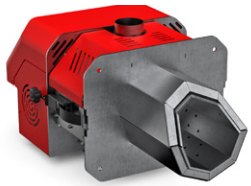

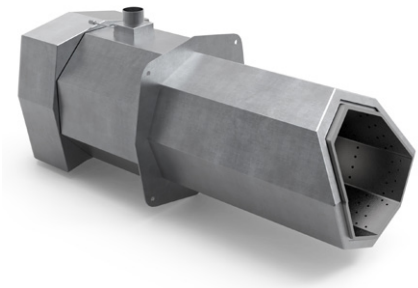

HT PellHard PLUS 14 - 700 kW

Pellet combustion burner with the slag scraper and with automation and 2mb feeder			
Name / Type	Power range [kW]	Net price [PLN]	Gross price [PLN]
HT PellHard PLUS 14	4 - 14	6 540,00	8 044,20
HT PellHard PLUS 20	6 - 20	6 650,00	8 179,50
HT PellHard PLUS 28	7 - 28	6 750,00	8 302,50
HT PellHard PLUS 35	11 - 35	7 500,00	9 225,00
HT PellHard PLUS 45	14 - 45	8 960,00	11 020,80
HT PellHard PLUS 55	17 - 55	10 650,00	13 099,50
HT PellHard PLUS 70	21 - 70	12 400,00	15 252,00
HT PellHard PLUS 90	27 - 90	16 450,00	20 233,50
HT PellHard PLUS 135	40 - 135	19 400,00	23 862,00
HT PellHard PLUS 170	51 - 170	26 200,00	32 226,00
HT PellHard PLUS 230	69 - 230	32 650,00	40 159,50
HT PellHard PLUS 280	84 - 280	36 280,00	44 624,40
HT PellHard PLUS 350	105 - 350	45 000,00	55 350,00
HT PellHard PLUS 400	120 - 400	53 900,00	66 297,00
HT PellHard PLUS 450	135 - 450	63 000,00	77 490,00
HT PellHard PLUS 500	150 - 500	72 000,00	88 560,00
HT PellHard PLUS 550	165 - 550	81 000,00	99 630,00
HT PellHard PLUS 700	210 - 700	105 950,00	130 318,50

Execution options and accessories - surcharge

Control		Net price [PLN]	Gross price [PLN]
HT-tronic® 900	KOTŁA CO CWU ZAW	included in price	
HT-tronic® 900 Touch	KOTŁA CO CWU ZAW - option	400,00	492,00
Conntrol expand module		**Net price [PLN]**	**Gross price [PLN]**
HT-tronic M-Z2	Valve module ZAW ZAW	500,00	615,00
HT-tronic M-BC	Buffer and circulation module bufora CYRKUL	500,00	615,00
HT-tronic Connect	Internet module www	550,00	676,50
HT-tronic Lambda	Lambda probe	1400,00	1772,00
Additional equipment / Execution option		**Net price [PLN]**	**Gross price [PLN]**
Additional fuel feed unit from the silo to 6 mb		2 900,00	3 567,00

Pellet boiler tanks

BASIC 300

SLIM Tank 100

Uniwersal Tank 300

Uniwersal Tank BIG 400

Uniwersal Tank BIG 600

BIG Tank 1000

Pellet boiler tanks	Net price [PLN]	Gross price [PLN]
BASIC 300	900,00	1107,00
SLIM Tank 100 - burner at the front of the boiler	1100,00	1353,00
Universal Tank 300 - burner at the front of the boiler	1350,00	1660,50
Universal Tank BIG 400	1850,00	2275,50
Universal Tank BIG 600	2050,00	2521,50
BIG Tank 1000 - burner at the front of the boiler	3350,00	4120,50
BIG Tank MAX- depending on the size	individual pricing	

HT SHW

Vertical Heat Exchanger HT SHW			
Name /Type	Water capacity [dm³]	Net price [zł]	Gross price [zł]
HT SHW-100	105	1 320,00	1 623,60
HT SHW-120	124	1 430,00	1 758,90
HT SHW-140	134	1 470,00	1 808,10
HT SHW-200	204	1 800,00	2 214,00
HT SHW-250	250	2 060,00	2 533,80
HT SHW-300	300	2 220,00	2 730,60
HT SHW-400	375	2 800,00	3 444,00
HT SHW-500	465	3 450,00	4 243,50

Execution options and accessories - surcharge

Additional equipment / Execution option	Net price [PLN]	Gross price [PLN]
The electric heater assembly GRW-1,4kW/230V	120,00	147,60
The electric heater assembly GRW-2,0kW/230V	120,00	147,60
The electric heater assembly GRW-3,0kW/230V	190,00	233,70
The electric heater assembly GRW-4,5kW/400V in capacities from 100 liters	640,00	787,20
The electric heater assembly GRW-6,0kW/400V in capacities from 100 liters	670,00	824,10

HT BT

Buffer tank HT BT			
Name /Type	Water capacity [dm³]	Net price [zł]	Gross price [zł]
HT BT-500	485	2 520,00	3099,60
HT BT1000	1000	3 950,00	4858,50

KNTK

Containers with a mounted boiler, installation and automatic control			
Name /Type	Length	Net price [zł]	Gross price [zł]
KNTK 4	4190	27 700,00	34 071,00
KNTK 5	5090	32 300,00	39 729,00
KNTK 6	6090	36 400,00	44 772,00

Execution options and accessories - surcharge

Boiler	Net price [PLN]	Gross price [PLN]
According to the investor's order		
Control	**Net price [PLN]**	**Gross price [PLN]**
According to the investor's order and type of the boiler		
Additional equipment / Execution option	**Net price [PLN]**	**Gross price [PLN]**
Tray feeder sensor (1 item)	200,00	246,00
Automatic exchanger cleaning system (up to 75 kW)	7 700,00	9471,00
Automatic exchanger cleaning system (for power above 150 kW)	13 850 00	17 035,50
Automatic fuel loading system	individual pricing	
Boiler installation: hydraulic, chimney and electric	individual pricing	

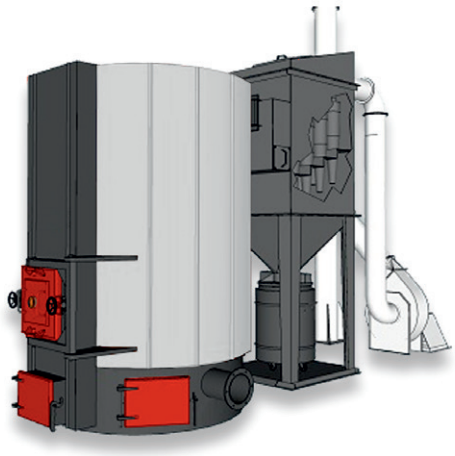

HT MegaBIO by Ventil

Vertical three-pass boilers for automatic burning of woodchips		
Type	Nominal power	Price
HT MBV 580	580	- Information available on request
HT MBV 870	870	- Information available on request
HT MBV 1 160	1 160	- Information available on request
HT MBV 1 450	1 450	- Information available on request
HT MBV 1 750	1 750	- Information available on request
HT MBV 2 320	2 320	- Information available on request
HT MBV 3 480	3 480	- Information available on request
HT MBV 4 640	4 640	- Information available on request
HT MBV 5 800	5 800	- Information available on request
HT MBV 6 500	6 500	- Information available on request
HT MBV 7 000	7 000	- Information available on request

Execution options and accessories - surcharge

Control
Information available on request
Additional equipment / Execution option
Information available on reques

HT-tronic 700/ 900

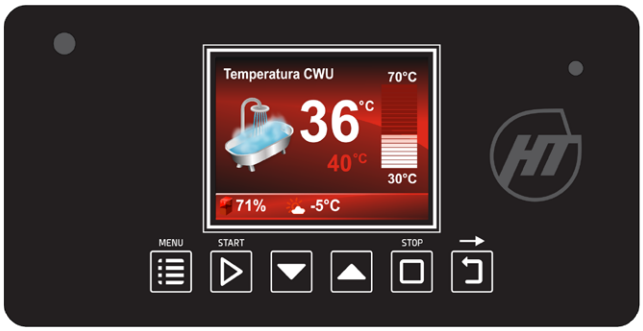

HT-tronic 700 / HT-tronic 900

The ***HT-tronic 700*** automation is designed to control the combustion process in an automatic coal boiler. The ***HT-tronic 900*** automation is designed for comprehensive control of a boiler with a pellet burner. Application of an innovative algorithm ***HT Logic II*** control allows automatic selection of boiler operation parameters in a wide range of power using the modulation function.

The automation continuously controls the operation of the boiler and the heating installation. Parameters of operations are presented on legible display. The device has been equipped with the function of boiler pump control to protect the boiler against returning cold water from the installation, it is equipped with the function of preparing domestic hot water in SUMMER mode, WINTER with or without priority, with the option of switching operation modes AUTOMATICALLY. It controls the operation of the central heating pump with the possibility of connecting a room thermostat. Also it controls the level of fuel in the tank and allows you to connect an additional room panel.

Automation normally supports the operation of one mixing valve system, it is possible to control five mixing valves, this is accomplished by connecting additional expansion modules. The programmed functions allow for regulation of mixing valves in floor or radiator mode with the possibility of working in weather mode. In addition, the controller has the ability to control the operation of the valve pump in cooperation with the room thermostat.

The device, thanks to the possibility of connecting additional modules not included in the standard equipment, enables the control of the feeder's work and in case of jam (***HT-tronic 700***). It is possible to connect the controller to the Internet using the ***HT tronic Connect*** module. The controller has a large color and clear LCD display with an intuitive interface that facilitates the operation of the boiler and the complete heating installation.

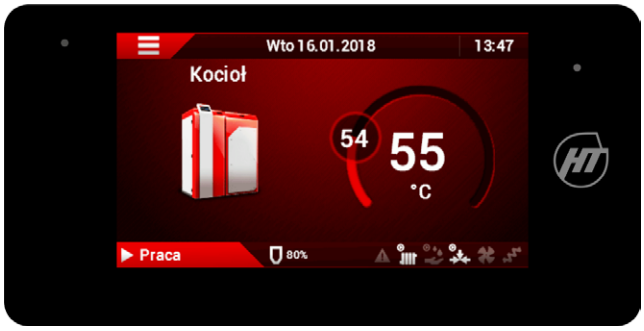

HT-tronic 700 Touch / HT-tronic 900 Touch

HT-tronic 700/ 900 Touch

HT-tronic 700/900 Touch controllers are equipped with 5" touch, color LCD display with an intuitive user interface that makes easier to operate the boiler and the heating system.

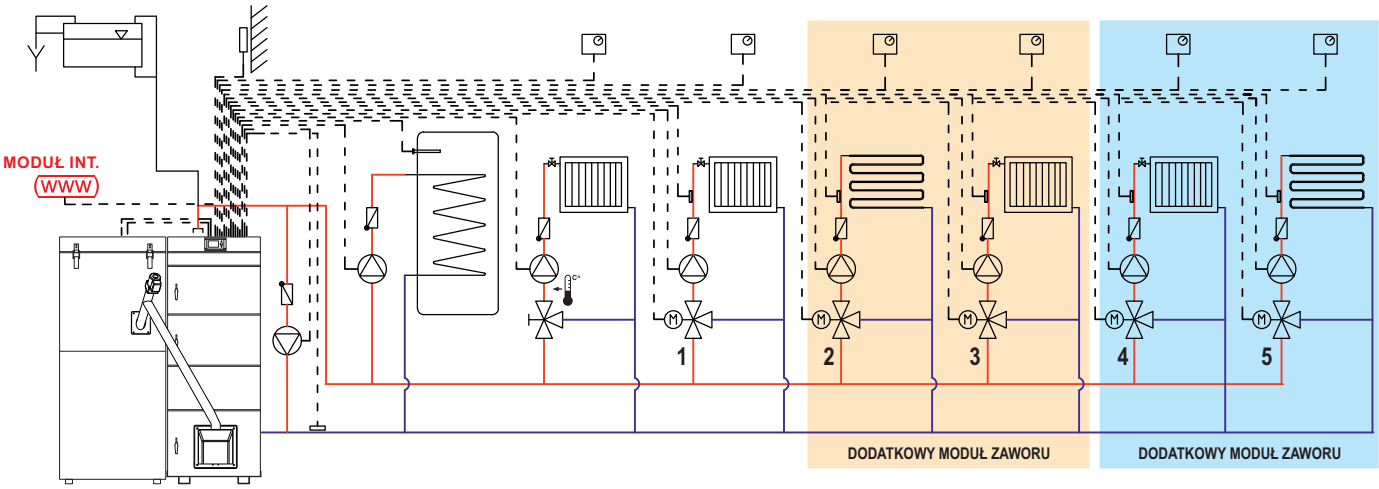

HT-tronic 700/900 and HT-tronic 700/900 Touch

Control		Net price [PLN]	Gross price [PLN]
HT-tronic® 900	KOTŁA CO CWU ZAW	included in price	
HT-tronic® 900 Touch	KOTŁA CO CWU ZAW - option	400,00	492,00
Conntrol expand module		**Net price [PLN]**	**Gross price [PLN]**
HT-tronic M-Z2	Valve module ZAW ZAW	500,00	615,00
HT-tronic M-BC	Buffer and circulation module bufora CYRKUL	500,00	615,00
HT-tronic Connect	Internet module WWW	550,00	676,50

HT-tronic Rooms

REMOTE CONTROL PANEL WITH ROOM THERMOSTAT

HT-Tronic Rooms is a wired device. The device acts as a remote panel, enabling the management of the temperature of the boiler, hot water circuit, buffer and mixing valves. Informs about the amount of fuel in the tank and about irregularities in the combustion process. It allows changing the basic operating parameters of the heating installation. In case of pellet boilers it allows to stop or restart the work

The ***HT-tronic Rooms*** panel has several functions that significantly improve the comfort of operating the heating installation and temperature control in a controlled room. It is a modern room thermostat equipped with a large LCD display and an intuitive operating interface. It has a number of functionalities that allow you to set and control the temperature in the selected room.

To increase the user's comfort, it is possible to choose one of several predefined modes, such as: Constant, Holiday, Economy, Ventilation and time zones, which automatically adjust the temperature to the individual needs.

HT-tronic Connect

INTERNET MODULE

To meet the needs of customers who value comfort and convenience, a ***HT-tronic Connect*** device has been created thanks to which, via the Internet, it is possible to operate and supervise boiler operation from any place where there is a network coverage. It can be connected to the Internet via a wireless network or via a network cable with RJ45 connector.

All ***HT-tronic*** controllers are fully compatible with the ***HT-tronic Connect*** internet module. Configuration is simple and fully secure thanks to the use of many innovative security features. The ***BRAGER CONNECT*** application was created to control the device.

The ***BRAGER CONNECT*** application was created to control the device. Operating of the application is simple and intuitive, additionally it has been enriched with the "Demo" version, which gives the user possibility to get familiar with the construction and operation of the application without interfering with the operation of the boiler.

Possible options

1. Boilers can be equipped with a cooling coil.
2. Feeder boilers can be equipped with an automatic ashing removal system.
3. Feeder boilers can be equipped with pneumatic cleaning system of the exchanger.
4. Feeder boilers and pellet boilers can be equipped with an enlarged fuel tank.
5. Feeder boilers can be equipped with OPS module (Combustion optimizer process).
6. Pellet boilers can be equipped with the *HT-tronic Lambda* (Lambda probe).
7. Boiler with the auger feeder can be equipped with the feeder rotation control panel.
8. Pellet boilers can be equipped with the self cleaning feeder (slag scraper)
9. Pellet Burners can be equipped with the pneumatic cleaning system

Legend

KOTŁA	boiler pump (introduced successively)		boiler operation in Fuzzy Logic mode
CO	central heating pump		boiler operation in HT Logic mode
CWU	domestic hot water pump		boiler firing-up program
ZAW	mixing valve pump		automatic boiler firing-up
CYRKUL	circulation circuit pump	WWW	Internet module
bufora	buffer pump		color display
	mixing valve actuator control		touchscreen color display
	valve actuator control in weather mode	GSM	GSM module
	thermostat line		modulating boiler operation
	control of additional fuel feeder	A+	energy class

TECHNICAL AND TRADE CONSULTING

Central Poland	+48 664 030 478
South Poland	+48 514 111 976
South - East Poland	+48 784 051 574
South - West Poland	+48 798 835 222
North - East Poland	+48 571 204 005
North - West Poland	+48 784 051 572
Coordinator of investment projects	+48 571 338 726

TECHNICAL CUSTOMER SERVICE

+48 664 784 500
+48 664 784 600
+48 664 784 700

e-mail: serwis@heiztechnik.pl

www.heiztechnik.pl

Dystrybutor

Przedsiębiorstwo Produkcyjne Heiztechnik spółka z ograniczoną odpowiedzialnością Sp. k.
ul. Drogowców 7 • 83-250 Skarszewy • tel.: + 48 58 588 28 70, +48 58 560 85 57 • fax: + 48 58 588 08 21
www.heiztechnik.pl • e-mail: biuro@heiztechnik.pl
NIP 592-214-17-34 • REGON 220362773 • KRS 0000334644